MONITORING REPORT (CDM-MR)
Version 01 - in effect as of: 28/09/2010

CONTENTS

A. General description of the project activity
- A.1. Brief description of the project activity
- A.2. Project participants
- A.3. Location of the project activity
- A.4. Technical description of the project
- A.5. Title, reference and version of the baseline and monitoring methodology applied to the project activity
- A.6. Registration date of the project activity
- A.7. Crediting period of the project activity and related information
- A.8. Name of responsible person(s)/entity(ies)

B. Implementation of the project activity
- B.1. Implementation status of the project activity
- B.2. Revision of the monitoring plan
- B.3. Request for deviation applied to this monitoring period
- B.4. Notification or request of approval of changes

C. Description of the monitoring system

D. Data and parameters monitored
- D.1. Data and parameters used to calculate baseline emissions
- D.2. Data and parameters used to calculate project emissions
- D.3. Data and parameters used to calculate leakage emissions
- D.4. Other relevant data and parameters

E. Emission reductions calculation
- E.1. Baseline emissions calculation
- E.2. Project emissions calculation
- E.3. Leakage calculation
- E.4. Emission reductions calculation
- E.5. Comparison of actual emission reductions with estimates in the registered CDM-PDD
- E.6. Remarks on difference from estimated value

MONITORING REPORT
Version 1 – 01/08/2011
CAMIL Itaqui Biomass Electricity Generation Project - 0231
Monitoring period 5
28/05/2010 – 30/04/2011

SECTION A. General description of the project activity

A.1. Brief description of the project activity:

The CAMIL Itaqui Biomass Electricity Generation Project is a biomass electricity generation project based in Itaqui city, Rio Grande do Sul state, Brazil, which has been in operation since July 2001. The purpose of the project is to avoid methane emissions due to the decay of unutilized rice husks and to avoid carbon emissions related to grid connected electricity generation.

The purpose of this monitoring report is to report the emission reductions generated by the CAMIL Itaqui Biomass Electricity Generation Project (CDM registration reference number: 0231) during the first monitoring period "28/05/2010 – 30/04/2011", and to serve as the basis for verification, certification and issuance of CERs.
Further background on this project can be found in the PDD and associated documents, which are available on the UNFCCC website:
http://cdm.unfccc.int/Projects/DB/TUEV-SUED1135876215.5/view?cp=2

Total emission reductions achieved in this monitoring period was 18,455 tCO_2e

A.2. Project Participants:

Name of Party involved (*) ((host) indicates a host Party)	Private and/or public entity(ies) project participants (*) (as applicable)	Kindly indicate if the Party involved wishes to be considered as project participant (Yes/No)
Brazil (host).	CAMIL Alimentos S/A	No
Germany	Essent Energy Trading B.V.	No
Brazil (host)	PTZ BioEnergy Ltd.	No
The Netherlands	Bioheat International B.V.	No
The Netherlands	Essent Energy Trading B.V.	No
Switzerland	Essent Energy Trading B.V.	No

A.3. Location of the project activity:

CAMIL Alimentos S/A, hereafter referred to as "Camil", is a rice mill located in Itaqui City, eastern region of Rio Grande do Sul State, at the address: Rua Dr. Afonso Escobar, 1193 – Estação, CEP 97650-000 – Itaqui City, which the geographical coordinates are:
Latitude: -29.1383, Longitude: -56.5527. Indicated in the map as "a".
The landfill where the rice husks that are not fired in the boiler is located at Sesmaria Rocha, Primeiro Distrito do município de Itaqui – Itaqui City, which the geographical coordinates are:
Latitude: -29.5886, Longitude: -56.4808. Indicated in the map as "c".
The store house location, where a certain amount of husks are stored temporally and to supply the power plant when the rice mill stops is located at Borges de Medeiros, 2225 – Itaqui City, which the geographical coordinates are:
Latitude: -29.1413, Longitude: -56.5419. Indicated in the map as "b".

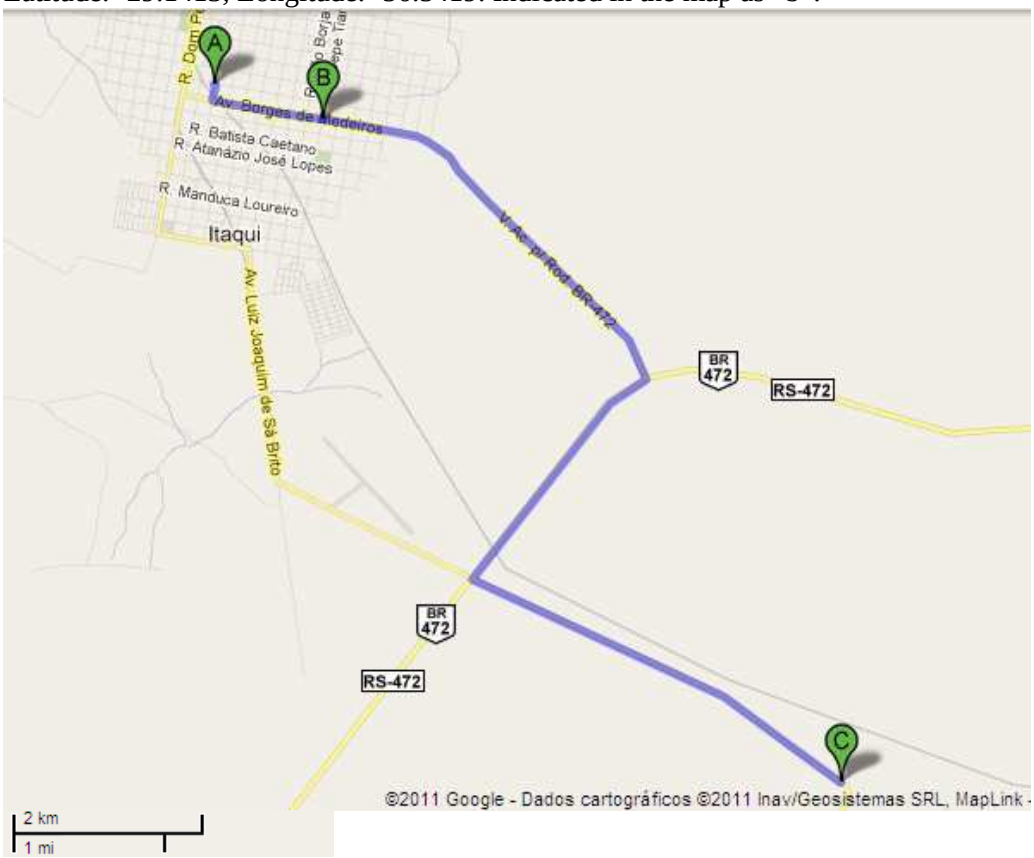

Figure 3. Location map (http://maps.google.com.br/maps?saddr=-29.1383,+-56.5527&daddr=-29.1413,+-56.5419+to:-29.5886,+-56.4808&hl=pt-BR&sll=-29.362435,-56.60219&sspn=0.558938,0.877533&geocode=FYRiQ_4dBBOh_A%3BFcxWQ_4dND2h_A%3BFYiDPP4d4Cui_A&mra=ls&z=10)

A.4. Technical description of the project:

The main activity in the region where the project will be located is rice production and processing. Rice mills generate huge amounts of biomass residues (mainly rice husks). Brazilian and local state legislation prohibits the unlicensed displacement and/or uncontrolled burning of that rice husks, as well as it restricts the land filling of rice husks, allowing the displacement in previously licensed areas. As result, huge amount of rice husks were left to decay in these licensed areas.
The CAMIL project consists in a biomass electricity unit with 4.2 MWe of installed capacity using rice husks residues as fuel. Currently, CAMIL demands a maximum of 3.5 MWe resulting in an amount of

0.7 MWe to be sold to the grid. The thermal capacity of the plant designed for process heat is 7.8 MWth. The overall thermal generation capacity of the plant is 30.35 MWth. No emission reductions will be claimed from renewable heat production, since the projects replaces an old thermal biomass fuelled boiler.

The combustion of the fuel has been performed with proven technologies like a medium pressured boiler (22 bar). The power plant control is supervised by a high standard automation set of PLCs and computers. A condensing steam turbine drives an electrical generator. The energy is managed by control panels and devices that keep a steady condition of voltage, frequency and load. Under currently operational conditions, the boiler produces 35,000 kg/h of steam at 22 bar and 350°C while it consumes 7,500 kg/h of rice husks.
The steam feeds a multistage steam condensing turbine at 0.09 bar. Before the turbine inlet, part of the total steam generated is deviated to process heat. The steam turbine drives a 3 phase synchronous generator producing up to 4,200 kWe at 13,800 V and 60 Hz.
An integration panel allows synchronicity and full load control for the auxiliary power plant services, rice mill and export to the grid. Electricity is sent to the utility distribution lines through a transformer of 13.8 kV. The project has obtained all necessary licenses and complies with the Brazilian and State environmental standards, mainly regarding the control of flue gas emissions and wastes. The ash from the plant is sold as a beneficial by-product.

A.5. Title, reference and version of the baseline and monitoring methodology applied to the project activity:

Type I; Category I.C.: Thermal energy for the user with or without electricity (version 13)
Type III; Category III.E.: Avoidance of methane production from biomass decay through controlled combustion, gasification or mechanical/thermal treatment (version 15.1)

A.6. Registration date of the project activity:

Renewal date: 28/05/2010

A.7. Crediting period of the project activity and related information (start date and choice of crediting period):

28/05/2010 – 30/06/2015

A.8. Name of responsible person(s)/entity(ies):

Fábio Saldanha
55 11 7063-3176
fabiosaldanha@begreen.com.br
skype: fabio.saldanha

SECTION B. Implementation of the project activity

B.1. Implementation status of the project activity

The project has been completed as planned and described in the Project Design Document (PDD). The plant is in operation since July 2001. The plant is using rice husks as biomass fuel and no fossil fuel of any kind has been used in the plant till date. Since October 2006, surplus electricity is supplied to the grid.

Date	Stop	Start	Remark
30/05/2010 to 11/06/2010	23:43hs	05:58hs	maintenance work
05/07/2010	-	-	maintenance work
14/07/2010	-	-	maintenance and cleaning work
18/07/2010	-	-	Substitution of inspection cover gasket
17/08/2010 to 20/08/2010	06h	00:40h	maintenance and cleaning work
08/09/2010	10:10h	11:21h	Pipe repair
17/09/2010	05:16h	20:46h	CLP repair
25/09/2010	08h	18h	Pipe repair
26/09/2010 to 27/09/2010	05:16h	20h	Chimney substitution and maintenance work
02/10/2010	06h00	22h40	pipe welding repair
10/10/2010	3h	20h30	maintenance work
17/10/2010	05h	20h30	pipe welding and hydrostatic test
24/10/2010	04h30	12h12	Elevator 6 repair
31/10/2010	5h30	12h10	pipe welding repair
05/11/2010	-	-	Ashes extractor repair
09/11/2010	-	-	maintenance work
23/11/2010	-	-	maintenance work
01/12/2010	-	-	maintenance work
11/12/2010 to 12/12/2010	6h	14h	Baghouse filter maintenance
24/12/2010	-	-	Baghouse filter maintenance
30/12/2010	-	-	Elevator 6 repair
02/02/2011 to 03/01/2011	0h	19h	maintenance and cleaning work
30/01/2011	-	-	Substitution of inspection a gasket
13/02/2011	5h	18h	maintenance and cleaning work
25/02/2011	7h30	18h	BAT2 pump repair and maintance work
27/03/2011	5h	18h	maintenance and cleaning work
09/04/2011	-	-	pipe welding repair
22/04/2011	-	-	pipe welding repair
23/04/2011	-	-	pipe welding repair
27/04/2011	-	-	pipe welding repair

B.2. Revision of the monitoring plan

Not applicable

B.3. Request for deviation applied to this monitoring period

Not applicable

B.4. Notification or request of approval of changes

Not applicable

SECTION C. Description of the monitoring system

Roles and Responsibilities

CAMIL, BEGREEN (fully and exclusively authorized to act on the behalf of CAMIL regarding this CDM project) to sell the carbon credits from the CAMIL Itaqui project) are all project participants.

CAMIL operates the plant that is part of the project and measures the required monitoring data related to the project and is qualified to do so. The factory supervisor and the power generation supervisor are responsible to the data quality and control.

In order to guarantee the quality of data collection and implementation of local QA/QC procedures, CAMIL provides instructions and training to the assistants and the operators of CAMIL and is responsible for the quality of the monitored data to be delivered to BEGREEN.

BEGREEN is responsible for interpretation of the monitoring data and the preparation of the monitoring reports.

BEGREEN instructs the CAMIL industrial manager on the type of data needed the quality assurances that should be in place, and provide data formats for presentation to BEGREEN. As an internal audit procedure, BEGREEN checks all monitoring data delivered by the CAMIL CDM industrial manager.

BEGREEN serves as focal point for communication with the UNFCCC and as Project Advisor.

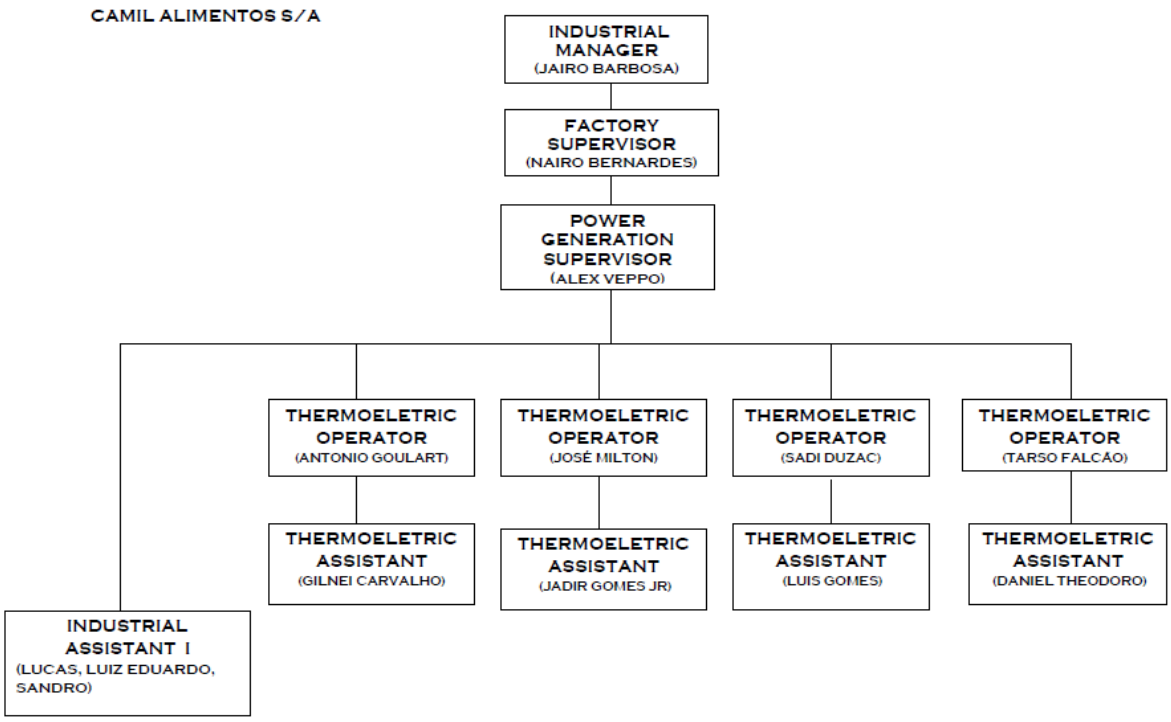

Figure 2: Camil Organogram

Grid connected electricity production

To facilitate the verification, first an overview is given of the measurement systems that are in place. Figure 2 shows the location of electricity measurement systems that are in place at the rice mill. Monitored data is measured by the measurement systems M1 and M2. Regulations require installation of a third system (M3), which basically reports the same values as M2.

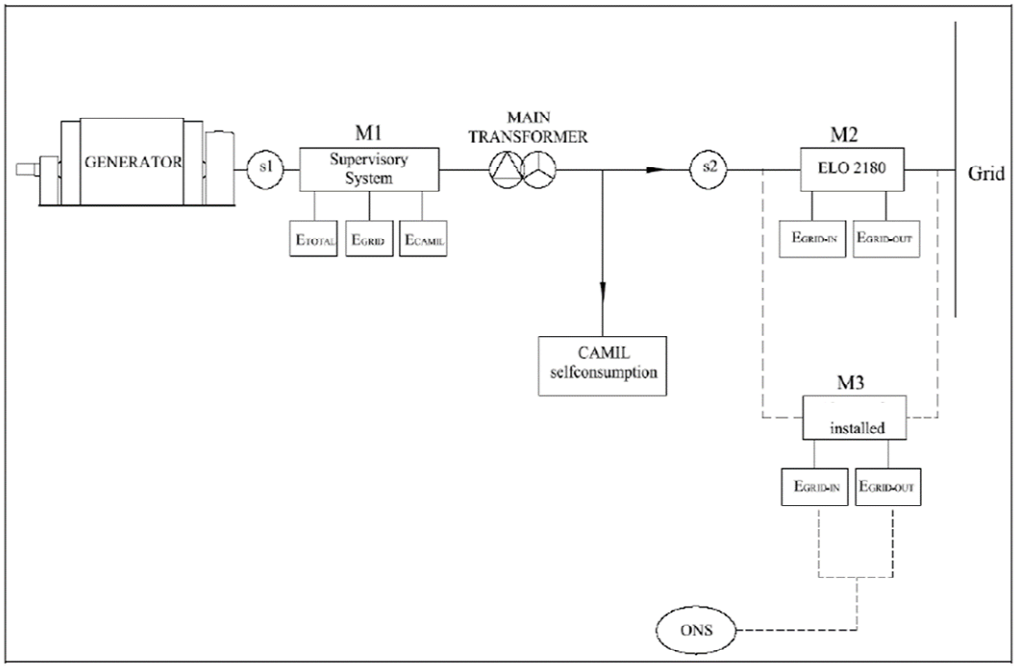

Figure 3: Diagram of the electricity measurement systems

M1
The first electricity measurement system (M1) is located right at the exit of the generator and constantly records the gross (ETOTAL) and grid (EGRID) electricity generated. It has two sensors, one placed just after the generator (s1) and one placed just before the grid (s2). By determination the difference between ETOTAL and EGRID, the electricity provided for CAMIL self-consumption (ECAMIL) is obtained. ECAMIL consists of the electricity delivered to the rice mill, but excludes the electricity used for self-consumption of the power plant. ETOTAL is the displaced electricity and equals EGy (Electricity production by the project activity) as mentioned in the PDD and is the most relevant parameter. The other parameters are used for quality control and quality assurance.
M2
The second electricity measurement system (M2) registers the electricity exported (EGRID-OUT) to and imported (EGRID-IN) from the grid. This device is identified as ELO 2180 and it is actually installed at the measurement cabin. The information generated by M2 is monthly read by the electricity concessionaire, which is responsible to submit the electricity bills. The electrical grid company owns the system.
M3
The third system (M3) was installed in April 2009. M3 is connected through internet to ONS, the Brazilian national authority responsible to collect the data about electricity, so that the data are uploaded in real time. The electrical grid company and CAMIL jointly own this system.

SECTION D. Data and parameters

Category I.C

D.1. Data and parameters determined at registration and not monitored during the monitoring period, including default values and factors	
Data / Parameter:	ω_{OM}
Data unit:	Dimensionless
Description:	Operating margin weight
Source of data used:	Tool to calculate the emission factor for an electricity system
Value(s) :	0.25
Indicate what the data are used for (Baseline/ Project/ Leakage emission calculations)	Baseline emission calculations
Additional comment:	The 'Tool to calculate the emission factor for an electricity system' describes that a value of 0.25 should be applied for the second and third crediting period.

Data / Parameter:	ω_{BM}
Data unit:	Dimensionless
Description:	Build margin weight
Source of data used:	Tool to calculate the emission factor for an electricity system
Value(s) :	0.75
Indicate what the data are used for (Baseline/ Project/ Leakage emission calculations)	Baseline emission calculations

Additional comment:	The 'Tool to calculate the emission factor for an electricity system' describes that a value of 0.75 should be applied for the second and third crediting period.

D.2. Data and parameters monitored	
Data / Parameter:	**EGPJ,m (Total electricity generation)**
Data unit:	MWh
Description:	Electricity displaced by the project activity in the present monitoring period
Measured /Calculated /Default:	Measured
Source of data:	Electronic supervisory system of the biomass power plant
Value (s) of monitored parameter:	

Month	**$EG_{PJ,m}$ (MWh)**	**Observations**
May/10	292	28/05/10 to 31/05/10
June/10	1,435	-
July/10	2,394	-
August/10	2,237	-
September/10	2,335	-
October/10	2,517	-
November/10	2,515	-
December/10	2,245	-
January/11	2,341	-
February/11	2,008	-
March/11	2,089	-
April/11	1,929	-
Total	**24,337**	-

Indicate what the data are used for (Baseline/ Project/ Leakage emission calculations)	Baseline emission calculations
Monitoring equipment (type, accuracy class, serial number, calibration frequency, date of last calibration, validity)	Type: Digital Meter Accuracy Class: 1.0 (error< 2.38%)

	Serial number: MGE NS. 04061559 Calibration frequency: At least once in 3 years Date of calibration: 17/05/2011 Validity:17/05/2012
Measuring/ Reading/ Recording frequency:	Continuously. The electricity generated is continuously integrated and registered on a monthly basis.
Calculation method (if applicable):	-
QA/QC procedures applied:	The electronic supervisory system is an electronic and computational double system that supervises and monitors all thermal power plant functions. According to the measurement equipment supplier, the equipment does not require periodically calibration. The measuring equipment will be certified and calibrated by the equipment supplier according to national standards and recalibrated at least once in 3 years.

Data / Parameter:	EFgrid,OM,y
Data unit:	tCO_2e/MWh
Description:	Dispatch data analysis operation margin CO_2 emission factor in month m of year y (most recent data available)
Measured /Calculated /Default:	Calculated
Source of data:	Brazilian Ministry of Science and Technology
Value (s) of monitored parameter:	

Year 2009	**tCO_2/MWh**
January	0.2813
February	0.2531
March	0.2639
April	0.2451
May	0.4051
June	0.3664
July	0.2407
August	0.1988
September	0.1622
October	0.1792
November	0.1810
December	0.1940
Average	**0.2476**

Indicate what the data are used for (Baseline/	Baseline emission calculations

Project/ Leakage emission calculations)	
Monitoring equipment (type, accuracy class, serial number, calibration frequency, date of last calibration, validity)	-
Measuring/ Reading/ Recording frequency:	Yearly
Calculation method (if applicable):	Dispatch data provided by the Brazilian Ministry of Science and Technology will be used. For the crediting period the monthly average operating margin 2009 has been used.
QA/QC procedures applied:	-

Data / Parameter:	EFgrid,BM,y
Data unit:	tCO_2e/MWh
Description:	Building margin CO_2 emission factor in month m of year y (most recent data available)
Measured /Calculated /Default:	Calculated
Source of data:	Brazilian Ministry of Science and Technology
Value (s) of monitored parameter:	**Year 2009** / **tCO_2/MWh** Year 2009 / 0.0794
Indicate what the data are used for (Baseline/ Project/ Leakage emission calculations)	Baseline emission calculations
Monitoring equipment (type, accuracy class, serial number, calibration frequency, date of last calibration, validity)	-
Measuring/ Reading/ Recording frequency:	Yearly
Calculation method (if applicable):	Data provided by the Brazilian Ministry of Science and Technology will be used. For the crediting period the monthly average operating margin 2009 has been used.
QA/QC procedures applied:	-

Data / Parameter:	Qsteam,m,y
Data unit:	t/month
Description:	Cumulated boiler outlet steam flow in month *m* of year *y*
Measured /Calculated /Default:	Measured
Source of data:	Electronic supervisory system of the biomass power plant
Value (s) of monitored parameter:	

Month	**Qsteam,m,y**	**Observations**
May/10	2172.32	28/May/10 to 31/May/10
June/10	1328.39	-
July/10	1900.84	-

	August/10	2091.74	-
	September/10	2201.87	-
	October/10	2288.00	-
	November/10	2371.81	-
	December/10	2166.58	-
	January/11	2233.29	-
	February/11	2121.10	-
	March/11	2299.68	-
	April/11	2122.71	-
	Total	**25298.32**	-
Indicate what the data are used for (Baseline/ Project/ Leakage emission calculations)	-		
Monitoring equipment (type, accuracy class, serial number, calibration frequency, date of last calibration, validity)	-		
Measuring/ Reading/ Recording frequency:	Monthly. The steam flow generated is continuously integrated and registered on a monthly basis.		
Calculation method (if applicable):	-		
QA/QC procedures applied:	The measuring equipment will be certified and calibrated by the equipment supplier and recalibrated at least once in 3 years.		

Data / Parameter:	T m,y
Data unit:	°C
Description:	Average boiler outlet steam temperature in month *m* of year *y*
Measured /Calculated /Default:	Measured
Source of data:	Electronic supervisory system of the biomass power plant
Value (s) of monitored parameter:	

Month	**T m,y**
May/10	247.23
June/10	175.74
July/10	238.10
August/10	235.94
September/10	271.73
October/10	289.66
November/10	294.47
December/10	290.62
January/11	280.49
February/11	277.18

	March/11	272.78
	April/11	262.82
	Average	261,40

Indicate what the data are used for (Baseline/ Project/ Leakage emission calculations)	-
Monitoring equipment (type, accuracy class, serial number, calibration frequency, date of last calibration, validity)	-
Measuring/ Reading/ Recording frequency:	Each 30 minutes.
Calculation method (if applicable):	-
QA/QC procedures applied:	The measuring equipment will be certified and calibrated by the equipment supplier and recalibrated at least once in 3 years.

Data / Parameter:	P m,y
Data unit:	kgf/cm²
Description:	Average boiler outlet steam pressure in month *m* of year *y*
Measured /Calculated /Default:	Measured
Source of data:	Electronic supervisory system of the biomass power plant
Value (s) of monitored parameter:	

Month	**P m,y**
May/10	21.01
June/10	13.29
July/10	18.95
August/10	19.61
September/10	21.54
October/10	21.63
November/10	22.74
December/10	20.70
January/11	21.08
February/11	21.93
March/11	22.13
April/11	20.98
Average	20.47

Indicate what the data are used for (Baseline/ Project/ Leakage emission calculations)	-
Monitoring equipment (type, accuracy class, serial number, calibration frequency, date of last calibration, validity)	-
Measuring/ Reading/ Recording frequency:	Each 30 minutes.
Calculation method (if applicable):	-
QA/QC procedures applied:	The measuring equipment will be certified

	and calibrated by the equipment supplier and recalibrated at least once in 3 years.

Category III.E.

D.1. Data and parameters determined at registration and not monitored during the monitoring period, including default values and factors	
Data / Parameter:	***Φ***
Data unit:	Dimensionless
Description:	Model correction factor to account for model uncertainties
Source of data used:	Tool to determine methane emissions avoided from dumping waste at a solid waste disposal site
Value(s) :	0.9
Indicate what the data are used for (Baseline/ Project/ Leakage emission calculations)	Baseline emission calculations
Additional comment:	Oonk (et el. 1994) have validated several landfill gas models based on 17 realized landfill gas projects. The mean relative error of multi-phase models was assessed to be 18%. Given the uncertainties associated with the model and in order to estimate emission reductions in a conservative manner, a discount of 10% is applied to the model results.

Data / Parameter:	***OX***
Data unit:	Dimensionless
Description:	Oxidation factor (reflecting the amount of methane from SWDS that is oxidized in the soil or other material covering the waste)
Source of data used:	Tool to determine methane emissions avoided from dumping waste at a solid waste disposal site – Version 04
Value(s) :	0.1
Indicate what the data are used for (Baseline/ Project/ Leakage emission calculations)	Baseline emission calculations
Additional comment:	The solid waste disposal site is covered with oxidizing material such as soil or compost.

Data / Parameter:	***F***
Data unit:	Dimensionless
Description:	Fraction of methane in the SWDS gas (volume fraction)
Source of data used:	2006 IPCC Guidelines for National Greenhouse Gas Inventories
Value(s) :	0.5
Indicate what the data are used for (Baseline/	Baseline emission calculations

Project/ Leakage emission calculations)	
Additional comment:	This factor reflects the fact that some degradable organic carbon does not degrade, or degrades very slow, under anaerobic conditions in the SWDS. A default value is recommended by the IPCC.

Data / Parameter:	**DOCj**
Data unit:	Fraction of degradable organic carbon (by weight) in the waste type *j*
Description:	2006 IPCC Guidelines for National Greenhouse Gas Inventories
Source of data used:	0.38
Value(s) :	Rice husk is a waste classified as food waste type. It was considered as % dry waste.
Indicate what the data are used for (Baseline/ Project/ Leakage emission calculations)	Baseline emission calculations
Additional comment:	-

Data / Parameter:	**MCF**
Data unit:	Dimensionless
Description:	Methane Correction Factor
Source of data used:	2006 IPCC Guidelines for National Greenhouse Gas Inventories
Value(s) :	0.28
Indicate what the data are used for (Baseline/ Project/ Leakage emission calculations)	Baseline emission calculations
Additional comment:	The methane correction factor accounts for the fact that unmanaged SWDS produce less methane from a given amount of waste than managed SWDS, because a larger fraction of waste decomposes aerobically in the top layers of unmanaged SWDS.

Data / Parameter:	**DOCf**
Data unit:	Dimensionless
Description:	Fraction of degradable organic carbon (DOC) that can decompose
Source of data used:	2006 IPCC Guidelines for National Greenhouse Gas Inventories
Value(s) :	0.5
Indicate what the data are used for (Baseline/ Project/ Leakage emission calculations)	Baseline emission calculations
Additional comment:	-

Data / Parameter:	**Kj**
Data unit:	Dimensionless
Description:	Decay rate for the waste type j
Source of data used:	2006 IPCC Guidelines for National

	Greenhouse Gas Inventories
Value(s) :	0.1
Indicate what the data are used for (Baseline/ Project/ Leakage emission calculations)	Baseline emission calculations
Additional comment:	According to the methodology III.E (Version 15.1) on page 6/10 the k value for the relevant waste type must be the lowest value from the range provided for the Boreal and Temperate Climate Zone as listed in table 3.3 in Chapter 3, volume 5 of 2006 Guidelines for National Greenhouse Gas Inventories. Once MAT/PET =2>1, according to it the IPCC default value to be used is 0,1. The MAT and PET data of the project activity location were obtained at www.inmet.gov.br/clima and are as follows: T (ºC) : 20ºC MAT (%) : 1800 MAT/PET = 2>1 PET (%) : 900 *PET – Potential Evapotranspiration

Data / Parameter:	**EFdiesel,CO_2**
Data unit:	tCO_2e/km
Description:	Diesel Emission Factor
Source of data used:	IPCC default value
Value(s) :	0.00067
Indicate what the data are used for (Baseline/ Project/ Leakage emission calculations)	Project emission calculations
Additional comment:	This value was calculated using IPPC values according the formulae below: ((Net Calorific Value) x (C emission factor) x (Mass Conversion Factor) x (Density))/(1000*(Truck diesel Consumption)) Net Calorific value = 43.33 TJ/ktonne diesel. Source : Ref 1, table 1-3, p 1.23 C emission factor = 20.2 tonnes C/TJ. Source: Ref 1, table 1.1, p 1.13. Mass conversion factor = 44/12 Density = 0.84 kg/liter Source: Ref 2 Truck diesel consumption = 4 km/litre. Source Ref 1, table 1-31, p 1.74 ‘uncontrolled’ shows

	5.7/km/litre, however as to be conservative a value of 4 km/litre has been applied. Ref 1: IPPC 1996 Revised 1996 IPCC Guidelines for National Greenhouse Gas Inventories Reference Manual (Volume 3) Ref 2: Oak Ridge National Laboratory http://bioenergy.ornl.gov/papers/misc/energy_conv.html

D.2. Data and parameters monitored	
Data / Parameter:	**F**
Data unit:	Dimensionless
Description:	Fraction of methane captured at the SWDS and flared, combusted or used in another manner
Measured /Calculated /Default:	-
Source of data:	Written information from the operator of the solid waste disposal site and/or site visits at the solid waste disposal site
Value (s) of monitored parameter:	0.0
Indicate what the data are used for (Baseline/ Project/ Leakage emission calculations)	Baseline emission calculations
Monitoring equipment (type, accuracy class, serial number, calibration frequency, date of last calibration, validity)	-
Measuring/ Reading/ Recording frequency:	Anually
Calculation method (if applicable):	No methane was captured or flared before and after the implementation of the project activity or used in another manner. For baseline emissions, the value applied is 0.0
QA/QC procedures applied:	-

Data / Parameter:	**GWPCH4**
Data unit:	tCO_2e / tCH_4
Description:	Global Warming Potential (GWP) of methane, valid for the relevant commitment period
Measured /Calculated /Default:	Default
Source of data:	Decisions under UNFCCC and the Kyoto Protocol. (a value of 21 is to be applied for the first commitment period of the Kyoto Protocol)
Value (s) of monitored parameter:	21
Indicate what the data are used for (Baseline/	Baseline emission calculations

Project/ Leakage emission calculations)	
Monitoring equipment (type, accuracy class, serial number, calibration frequency, date of last calibration, validity)	-
Measuring/ Reading/ Recording frequency:	-
Calculation method (if applicable):	-
QA/QC procedures applied:	-

Data / Parameter:	**MC**
Data unit:	%
Description:	Moisture Content of the biomass
Measured /Calculated /Default:	Measured
Source of data:	Laboratory analysis
Value (s) of monitored parameter:	9.2
Indicate what the data are used for (Baseline/ Project/ Leakage emission calculations)	-
Monitoring equipment (type, accuracy class, serial number, calibration frequency, date of last calibration, validity)	Technician: Rodrigues Garcia Registration number: 9873 Date: 05/05/2011 Validity: Undetermined
Measuring/ Reading/ Recording frequency:	Annually
Calculation method (if applicable):	-
QA/QC procedures applied:	-

Data / Parameter:	**RPwith-husks, y**
Data unit:	Tonnes/year
Description:	Amount of rice with husks processed by CAMIL at the year y
Measured /Calculated /Default:	Measured
Source of data:	Rice production numbers of the CAMIL Itaqui rice processing plant
Value (s) of monitored parameter:	**Month** / **$RP_{with\text{-}husks,\ y}$ (May2010 to April 2011)** **Total** / 356,064,050
Indicate what the data are used for (Baseline/ Project/ Leakage emission calculations)	-
Monitoring equipment (type, accuracy class, serial number, calibration frequency, date of last calibration, validity)	-
Measuring/ Reading/ Recording frequency:	Continuously, aggregated monthly
Calculation method (if applicable):	-
QA/QC procedures applied:	The flux balance will be calibrated according to the Brazilian standards at least once in 3

	years.

Data / Parameter:	**HC**
Data unit:	%
Description:	Husk content of the rice with husks
Measured /Calculated /Default:	Default
Source of data:	UFRGS, Prof. Carlos Bergmann Publication. Relatório Técnico do Projeto: Utilização do Gás Natural na Secagem de Grãos.
Value (s) of monitored parameter:	23
Indicate what the data are used for (Baseline/ Project/ Leakage emission calculations)	Baseline emission calculations
Monitoring equipment (type, accuracy class, serial number, calibration frequency, date of last calibration, validity)	-
Measuring/ Reading/ Recording frequency:	Once
Calculation method (if applicable):	-
QA/QC procedures applied:	-

Data / Parameter:	CTrice husk,x
Data unit:	m^3/truck
Description:	Volumetric truck capacity in the baseline scenario
Measured /Calculated /Default:	Measured
Source of data:	The truck capacity for rice husk transportation will be measured through representative sampling.
Value (s) of monitored parameter:	28.68
Indicate what the data are used for (Baseline/ Project/ Leakage emission calculations)	Baseline emission calculations
Monitoring equipment (type, accuracy class, serial number, calibration frequency, date of last calibration, validity)	-
Measuring/ Reading/ Recording frequency:	Yearly
Calculation method (if applicable):	-
QA/QC procedures applied:	The truck capacity was determined by measuring the dimensions of the load compartment of the truck.

Data / Parameter:	NIrice husk,x
Data unit:	Dimensionless
Description:	Number of truckloads for rice husk transportation in the year x
Measured /Calculated /Default:	Measured
Source of data:	Invoices
Value (s) of monitored parameter:	**Month** | **NI**rice husk,x

	May/10 | 7 June/10 | 931 July/10 | 353 August/10 | 721 September/10 | 599 October/10 | 525 November/10 | 416 December/10 | 439 January/11 | 60 February/11 | 39 March/11 | 81 April/11 | 125 **Total** | 4,296
Indicate what the data are used for (Baseline/ Project/ Leakage emission calculations)	Baseline emission calculations
Monitoring equipment (type, accuracy class, serial number, calibration frequency, date of last calibration, validity)	-
Measuring/ Reading/ Recording frequency:	Truck bills are aggregated to monthly data.
Calculation method (if applicable):	-
QA/QC procedures applied:	Each truck that leaves CAMIL industrial unit receives an invoice. Therefore, the number of invoices collected along a given period equals to the number of trucks leaving CAMIL industrial unit in a given period. The amount of rice husks sent to the landfill (determined indirectly through the number of transportation invoices) is constantly monitored by CAMIL once it is related to the payment of the Transportation Company.

Data / Parameter:	drice husk
Data unit:	tonnes/m^3
Description:	Rice husk density
Measured /Calculated /Default:	Measured
Source of data:	Sampling analysis.
Value (s) of monitored parameter:	0.108853
Indicate what the data are used for (Baseline/ Project/ Leakage emission calculations)	Baseline emission calculations
Monitoring equipment (type, accuracy class, serial number, calibration frequency, date of last calibration, validity)	-
Measuring/ Reading/ Recording frequency:	Yearly
Calculation method (if applicable):	The amount of rice husks in the truck is determined in the truck balance. This amount is divided by the truck volumetric capacity.

QA/QC procedures applied:	The rice husk density hardly varies. Therefore, the rice husk density can be considered as a constant parameter.

Data / Parameter:	**AC**
Data unit:	%
Description:	Ash content of the biomass
Measured /Calculated /Default:	Measured
Source of data:	Laboratory analysis
Value (s) of monitored parameter:	18.6
Indicate what the data are used for (Baseline/ Project/ Leakage emission calculations)	Baseline emission calculations
Monitoring equipment (type, accuracy class, serial number, calibration frequency, date of last calibration, validity)	-
Measuring/ Reading/ Recording frequency:	Annually
Calculation method (if applicable):	The ash content will be measured through laboratory analysis using an appropriate sample as requested by the laboratory
QA/QC procedures applied:	-

Data / Parameter:	**CTy, ash**
Data unit:	Tonnes/truck
Description:	Average truck capacity for ash transportation
Measured /Calculated /Default:	Measured
Source of data:	Samples
Value (s) of monitored parameter:	4.753
Indicate what the data are used for (Baseline/ Project/ Leakage emission calculations)	Baseline emission calculations
Monitoring equipment (type, accuracy class, serial number, calibration frequency, date of last calibration, validity)	Weighbridge
Measuring/ Reading/ Recording frequency:	Yearly
Calculation method (if applicable):	-
QA/QC procedures applied:	The average truck capacity will be measured once on a weighbridge using representative samples. If a new type of truck is introduced for ash removal, the capacity of this new type of truck will be measured and the date of introduction of this new truck type will be monitored. After this date this new truck capacity will be used for the monitoring calculations.

Data / Parameter:	**DAF ash**
Data unit:	km/truck
Description:	Average distance for ash transportation
Measured /Calculated /Default:	Measured
Source of data:	The average distance for ash transportation

	will be measured through representative sampling.
Value (s) of monitored parameter:	12
Indicate what the data are used for (Baseline/ Project/ Leakage emission calculations)	Project emission calculations
Monitoring equipment (type, accuracy class, serial number, calibration frequency, date of last calibration, validity)	Odometer
Measuring/ Reading/ Recording frequency:	Yearly
Calculation method (if applicable):	-
QA/QC procedures applied:	The average distance was determined through representative samples by the transportation company. The current longest distance to a landfill is still the same as per the PDD.

Data / Parameter:	**Husks avoided from decay**
Data unit:	%
Description:	Percentage of the amount of rice husks that is combusted in the project activity facility that would have been disposed in a solid waste disposal site without methane recovery in the absence of the project activity and would decay anerobically in the disposal site throughout the crediting period.
Measured /Calculated /Default:	Calculated
Source of data:	Assessment of common practices
Value (s) of monitored parameter:	100
Indicate what the data are used for (Baseline/ Project/ Leakage emission calculations)	Baseline emission calculations
Monitoring equipment (type, accuracy class, serial number, calibration frequency, date of last calibration, validity)	-
Measuring/ Reading/ Recording frequency:	Yearly
Calculation method (if applicable):	For the Monitoring Report period determination of emission reductions, a measured value of 100% was applied since all rice husks processed in the project activity would have been sent to landfill, and would been subject to decay throughout the period.
QA/QC procedures applied:	-

SECTION E. Emission reductions calculation

E.1. Baseline emissions calculation

The baseline emissions (*BEy*) resulting from the electricity supplied and/or not consumed from the grid is calculated as follows, where *EGy* is the net electricity generated from the Project.

BEy = EGy * EFgrid,CM,y

The baseline emissions factor (EFgrid,CM,y*)* is a weighted average of the operating margin emission factor

EFgrid,OM,y and the built margin emissions factor EFgrid,BM,y:

EFgrid,CM,y = EFgrid,OM,y * ωOM + EFgrid,BM,y * ωBM

Where:
EFgrid,CM,y = Combined margin CO_2 emission factor for grid connected power generation in year y (tCO_2/MWh).
EFgrid,BM,y = Build margin CO_2 emission factor in year y (tCO_2/MWh)
EFgrid,OM,y = Operating margin CO_2 emission factor in year y (tCO_2/MWh)
ωOM = Weighting of operating margin emissions factor (%)
ωBM = Weighting of build margin emissions factor (%)

The weights ω*OM* and ω*BM* are 0.25 and 0.75, respectively as described in the 'Tool to calculate the emission factor for an electricity system' related to the second crediting period.

The Brazilian Science and Technology Ministry is making the operating and construction margin available on line at (http://www.mct.gov.br/index.php/content/view/74689.html).

Using the values informed by the Ministry and the electricity generated each month it is possible to calculate the baseline emission factor related to each month and consequently the yearly carbon dioxide emission reduction generated by the project activity.

Overview

Table 1 provides an overview of the data used to determine the baseline emissions related to grid connected electricity generation.

Table 1: Baseline emissions by grid connected renewable electricity generation

Operating Margin of the year y	EFgrid,OM,y	0.2476	tonnes CO_2/MWh	Brazilian Science and Technology Ministry
Build Margin of the year y	EFgrid,BM,y	0.0794	tonnes CO_2/MWh	Brazilian Science and Technology Ministry
Operating margin weight	ω*OM*	0.25	Dimensionless	IPCC default value
Build margin weight	ω*BM*	0.75	Dimensionless	IPCC default value
Combined margin CO_2 emission factor	EFgrid,CM,y	0.1214	tonnes CO_2/MWh	Calculated
Electricity generation from the project	EGy	24,337	MWh/yr	Supervisory system of the power plant
Baseline emissions	BEy	2,956	tonnes CO_2/yr	Calculated

Category III.E.

Baseline emissions

BEy = BECH4,SWDS,y

where,

BEy = Baseline emissions at year "y" during crediting period (tCO_2e)
BECH4,SWDS,y = Methane emissions avoided during the year y from preventing waste disposal at the solid waste disposal site (SWDS) during the period from the start of the project activity to the end of the year y according to the "Tool to determine methane emissions avoided from dumping waste at a solid waste disposal site" (version 04) (tCO_2e).

The estimation of the methane emission potential of a solid waste disposal site (*BECH4,SWDS,y*, in tCO_2e) shall be undertaken using the "Tool to determine methane emissions avoided from dumping waste at a solid waste disposal site" (version 04), found on the CDM website. The tool may be used with the oxidation factor (OX = 0.0), assuming no oxidation of methane in the covering layers, and the factor "f=0.0" assuming that no methane is captured and flared.

$$BE_{CH4,SWDS,y} = \varphi \cdot (1-f) \cdot GWP_{CH4} \cdot (1-OX) \cdot \frac{16}{12} \cdot F \cdot DOC_f \cdot MCF \cdot \sum_{x=1}^{y} \sum_{j} W_{j,x} \cdot DOC_j \cdot e^{-k_j \cdot (y-x)} \cdot \left(1-e^{-k_j}\right)$$

where:

BECH4,SWDS,y = Methane emissions avoided during the year *y* from preventing waste disposal at the solid waste disposal site (SWDS) during the period from the start of the project activity to the end of the year y (tCO_2e)
φ = Model correction factor to account for model uncertainties (0.9)
f = Fraction of methane captured at the SWDS and flared, combusted or used in another manner
GWPCH4 = Global Warming Potential (GWP) of methane, valid for the relevant commitment period
OX = Oxidation factor (reflecting the amount of methane from SWDS that is oxidized in the soil or other material covering the waste)
F = Fraction of methane in the SWDS gas (volume fraction) (0.5)
DOCf = Fraction of degradable organic carbon (DOC) that can decompose
MCF = Methane correction factor
Wj,x = Amount of organic waste type *j* prevented from disposal in the SWDS in the year *x* (tons)
DOCj = Fraction of degradable organic carbon (by weight) in the waste type *j*
kj = Decay rate for the waste type *j*
j = Waste type category (index)
x = Year during the crediting period: x runs from the first year of the first crediting period (x = 1) to the year y for which avoided emissions are calculated (x = y)
y = Year for which methane emissions are calculated

Since only rice husks are prevented from disposal, there is only one waste type category j, the index j is therefore not needed in this project.

The first year of the first crediting period started on 1 July 2000. The year x = 1 therefore corresponds with the period 1 July 2001 – 30 June 2002, x = 2 with the period 1 July 2002 – 30 June 2003, etc.

Key assumptions in the determination of the following data are provided below.

1. Oxidation factor OX,
2. Methane Correction Factor MCF,
3. Amount of waste prevented from disposal Wj,x
4. Fraction of degradable organic carbon DOCj and
5. Decay rate k

1. Oxidation Factor, OX

OX = 0.1
Considering: the solid waste disposal site is covered with oxidizing material such as soil or compost.

2. Methane Correction Factor MCF

MCF = 0.28
Default value stated in AMS-III.E version 15.1.

3. Amount of waste prevented from disposal Wj,x

The amount of waste prevented from disposal in year x is calculated in the following way:

$$Wj,x = Qbiomass,x * (1 – MC)$$

Where:
Wj,x = Amount of rice husks prevented from disposal in the SWDS in the year *x* (tonnes/year, dry basis)
Qbiomass,x = Amount of rice husks prevented from disposal in the SWDS in the year *x* (tonnes/year, wet basis)
MC = Moisture Content (% by weight)

$$Qbiomass,x = Qbiomass_total,x - Qbiomass_baseline$$

Where:
Qbiomass,x = Amount of rice husks prevented from disposal in the SWDS in the year *x* (tonnes/year, wet basis)
Qbiomass_total,x = Total amount of biomass consumed in the project activity in the year *x* (tonnes/year, wet basis)
Qbiomass_baseline = Amount of biomass consumed during the baseline scenario in the absence of the project activity (tonnes/year, wet basis)

In absence of the project activity, most rice husks were left for decay and only a small part of the husks were used to provide heat. This quantity is indicated as Qbiomass_baseline and needs to be subtracted from Qbiomass_total to determine what amount of rice husks is prevented from disposal in the SWDS in year x. Qbiomass_baseline is determined based on data available from the year 2000 when the CAMIL Itaqui biomass electricity generation plant was not installed yet.

$$Qbiomass_total,x = Qgenerated, x – Qremoved, x$$

Where:
Qgenerated, x = Amount of rice husks produced in the year x (tonnes/year)

Qremoved, x = Amount of rice husks removed by truck to landfill in the year x (tonnes/year)

Qgenerated, x = HC * RPwith-husks, x

Where:
HC = Rice Husk Content of husky rice (weight %)
RPwith-husks, x = Amount of rice with husks produced in the year x (tonnes/year)

Qremoved, x = NIrice husk,x * CTrice husk,x*drice husk

Where:
NI rice husk,x = Number of invoices for rice husk transportation in the year x
CTrice husk,x = Volumetric truck capacity in the year x (m3)
drice husk = Rice husk density (tonnes/m3)

Qbiomass_baseline = Qgenerated, baseline – Qremoved, baseline

Where:
Qgenerated, baseline = Amount of rice husks produced in the baseline scenario (tonnes/year)
Qremoved, baseline = Amount of rice husks removed by truck to landfill in the baseline scenario (tonnes/year)

Qgenerated, baseline = HC * RPwith-husks,baseline

Where:
RPwith-husks, baseline = Amount of rice with husks produced in the baseline scenario (tonnes/year)
HC = Rice Husk Content of rice with husks (weight %)

Qremoved, baseline = NIrice husk, baseline * CTrice husk, baseline* drice husk

Where:
NIrice husk, baseline = Number of invoices for rice husk transportation in the baseline scenario
CTrice husk, baseline = Volumetric truck capacity in the baseline scenario (m3)
drice husk = Rice husk density (tonnes/m^3)

4. Fraction of degradable organic carbon (by weight) in each waste type j (DOCj):

The ‘Tool to determine methane emissions avoided from dumping waste at a solid waste disposal site” (version 04) provides the following value regarding determination of DOCj (Food, food waste, beverages and tobacco (other than sludge)).

DOCj = 38 %

Considering:
a. Waste Type: food waste
b. Condition: dry waste

5. Decay rate:

AMS-III.E (article 22) states *that the k value for the relevant waste type must be the lower value from the ranges provided for the Boreal and Temperate Climate zone as listed in Table 3.3 in Chapter 3,volume 5 of 2006 IPPCC Guidelines for National Greenhouse Gas Inventories*.

k = 0.1

Considering:
The k value results from the lowest value for food waste type from the range provided for the Boreal and Temperate Climate Zone as listed in Table 3.3 in Chapter 3, volume 5 of 2006 IPCC Guidelines for National Greenhouse Gas Inventories as stipulated in AMS-III.E version 15.1 article 22.

Overview

The table below provides an overview of the data used to determine the baseline emissions related to avoidance of methane production from biomass decay through controlled combustion.

Table 2: Baseline emissions by avoidance of methane production from biomass decay through controlled combustion

Indicator	**Abbreviation**	**Value**	**Unit**	**Source of data**
Baseline Emissions	BEy	12,935	tCO_2/year	Calc.
Methane emissions avoided during the year y from preventing waste disposal at the solid waste disposal site (SWDS) during the period from the start of the project activity to the end of the year y	BECH4, SDWS,y	12,935	tCO_2/year	Calc.
Global Warming Potential for CH4	GWPCH4	21	tCO_2e / tCH4	IPCC
Model correction factor to account for model uncertainties	φ	0.9	-	IPCC
Fraction of methane captured at the SWDS and flared, combusted or used in another manner	f	0	-	IPCC
Oxidation factor	OX	0.1	-	IPCC
fraction of CH4 in landfill gas	F	0.5	-	IPCC
Fraction of degradable organic carbon that can decompose	DOCf	0.5	-	IPCC
Fraction of degradable organic carbon (by weight) in the waste	DOCj	0.38	-	IPCC
Methane Correction Factor	MCF	0.28	-	IPCC
Moisture content of the husks	MC	9.6	%	Measured
Rice husk content of rice with husks	HC	23	%	UFRGS, Prof. Carlos Bergmann Publication
Decay rate for the rice husk	kj	0.1	-	IPCC

E.2. Project emissions calculation:

Category I.C

Project emissions

The project emissions are negligible.

Category III.E.

Project emissions

According to AMS-III.E version 15.1 article 17, the project emissions are calculated using the following formula:

PEy = PEy,comb + PEy,transp + PEy,power

where:
PEy project activity direct emissions in the year "y" (tonnes of CO_2 equivalent)
PEy,comb emissions through combustion of non-biomass carbon in the year "y" (tCO_2e)
PEy,transp emissions through incremental transportation in the year "y" (tCO_2e)
PEy,power emissions through electricity or diesel consumption in the year "y" (tCO_2e)

(i) Emissions through combustion of non-biomass carbon in the year "y":

PEy,comb = Qy,non-biomass * 44/12 + Qy,fuel * Ey,fuel

where:
Qy,non-biomass Non-biomass carbon of the waste combusted in the year "y" (tonnes of carbon)
Qy,fuel Quantity of auxiliary fuel used in the year "y" (tonnes)
Ey,fuel CO_2 emission factor for the combustion of the auxiliary fuel (tonnes CO_2 per tonne fuel, according to IPCC Guidelines)

The CO_2 emissions related to combustion of non-biomass carbon content of the waste are zero because the project only combust rice husks, which is 100% biomass, therefore PEy, comb = 0

(ii) Emissions through incremental transportation in the year "y":

PEy,transp = (Qy/CTy) * DAFw * $EFCO_2$ + (Qy,ash/CTy,ash) * DAFash * $EFCO_2$ + (Qy,RDF/SB/CTy,RDF/SB) * DAFRDF/SB * $EFCO_2$

where:
Qy quantity of waste combusted in the year "y" (tonnes)
CTy average truck capacity for waste transportation (tonnes/truck)
DAFw average incremental distance for waste transportation (km/truck)
$EFCO_2$ CO_2 emission factor from fuel use due to transportation ($kgCO_2$/km, IPCC default values or local values can be used.
Qy,ash quantity of combustion residues produced in the year "y" (tonnes)
CTy,ash average truck capacity for combustion residues transportation (tonnes/truck)
DAFash average distance for combustion residues transportation (km/truck)

Qy,RDF/SB Quantity of RDF/SB produced in the year "y" (tonnes)
CTy,RDF/SB Average truck capacity for RDF/SB transportation (tonnes/truck)
DAFRDF/SB Aggregate average distance for RDF/SB transportation to the storage in the production site as well as to the end user sites (km/truck)

Only ash is transported as a result of the project activity.

Therefore: PEy,transp = (Qy,ash/CTy,ash) * DAFash * $EFCO_2$

(iii) Emissions through electricity or diesel consumption in the year "y":

All electricity needed to run the rice husk power plant produced by the same power plant. So the used electricity is renewable and the emissions through electricity or diesel consumption are zero.

Summarizing, only project emissions related to the ash transportation are calculated as follows:

PEy = PEy,transp = (Qy,ash/CTy,ash) * DAFash * $EFCO_2$

where:
$EFCO_2$ CO_2 emission factor from fuel use due to transportation ($kgCO_2$/km, IPCC default values or local values can be used).
Qy,ash quantity of combustion residues produced in the year "y" (tonnes)
CTy,ash average truck capacity for combustion residues transportation (tonnes/truck)
DAFash average distance for combustion residues transportation (km/truck)

The quantity of combustion residues is calculated from rice husk production times the ash content in the biomass. The truck capacity is determined once a year. The average distance between the project and the ash displacement can be registered with the kilometer counter of a truck or car.

Formulae to supplement equations presented in AMS-III.E.
The amount of combustion residues produced is determined in the following way:

Qash = AC*Qbiomass,x

Where,
Qash quantity of combustion residues produced (tonnes/year)
AC ash content in rice husks (% weight)
Qbiomass Quantity of biomass treated under the project activity (tonnes/year)

E.3. Leakage emissions calculation:

Category I.C

Leakage
No leakage calculation is required, as no energy generating equipment is transferred from another activity and no energy generating equipment is transferred to another activity.

Category III.E.

Leakage
The controlled combustion technology is not equipment transferred from/to another activity. Therefore leakage effects do not need to be considered.

E.4. Emission reductions calculation / table:

Combined Emission Reductions

The total combined emission reduction of the bundle of project activities of type I.C. and III.E are:

ERtotal = ERIC + ERIIIE

ERtotal Total net emission reduction by the bundle of project activities (tonnes CO_2 equivalent)
ERIC Emission reduction due to thermal energy for the user with or without electricity (tonnes CO_2e)
ERIIIE Emission reduction by the avoidance of methane production from biomass decay through controlled combustion (tonnes of CO_2 e)

	Type I.C Thermal energy for the user with electricity				**Type III.E Avoidance of methane production**				**Total net emission reduction**
Monitoring Report period	Baseline emissions (A)	Project emissions (B)	Leakage emissions (C)	Net emission reduction (A-B-C)	Baseline emissions (D)	Project emissions (E)	Leakage emissions (F)	Net emission reduction (D-E-F)	(A-B-C) + (D-E-F)
28/05/2010 – 30/06/2010	210	0	0	210	1,420	2	0	1,418	1,628
01/07/2010 – 30/04/2011	2,746	0	0	2,746	14,098	17	0	14,082	16,827
Total estimated reductions	2,956	0	0	2,956	15,518	19	0	15,499	18,455
Total number of crediting years	0.93	0.93	0.93	0.93	0.93	0.93	0.93	0.93	0.93

E.5. Comparison of actual emission reductions with estimates in the CDM-PDD

Methodology	**Values applied in ex-ante calculation of the registered CDM-PDD**	**Actual values reached during the monitoring period**	**Unit**
AMS-I.C	2,622	2,956	**Emission reductions (tCO_2e)**
AMS-III.E	13,094	15,499	**Emission reductions (tCO_2e)**

Total	15,715	18,455	**Emission reductions (tCO_2e)**

E.6. Remarks on difference from estimated value in the PDD

The monitored emission reductions (338 days) are 18.455 tCO_2e which are about 17% more than the quantum (15,715 tCO_2e) for the equivalent period (338 days) that was estimated in the PDD. For this comparison the 338/365 (338 days out of 365 – 28 May 2010 to 30 April 2011) of CDM-PDD estimation of AMS-I.C for the tenth year (2,831 tCO_2e – the same for every year) was used, and the 34/365 (34 days out of 365 – 28/05/2010 to 30/06/2010) of the total estimation of the ninth crediting period of the CDM-PDD (13,393 tCO_2e) plus 304/365 (304 days out of 365 – 01/07/2010 to 30/04/2011) of the total estimation of the tenth crediting period of the CDM-PDD for AMS-III.E (14,223 tCO_2e). This was made because the emission reductions of AMS-III.E vary between years. The total difference isn't considered material as it could represent the uncertainty related to the emission reductions estimation.

- - - - -

History of the document

Version	Date	Nature of revision
01	EB 54, Annex 34 28 May 2010	Initial adoption.
Decision Class: Regulatory **Document Type**: Guideline, Form **Business Function**: Issuance		